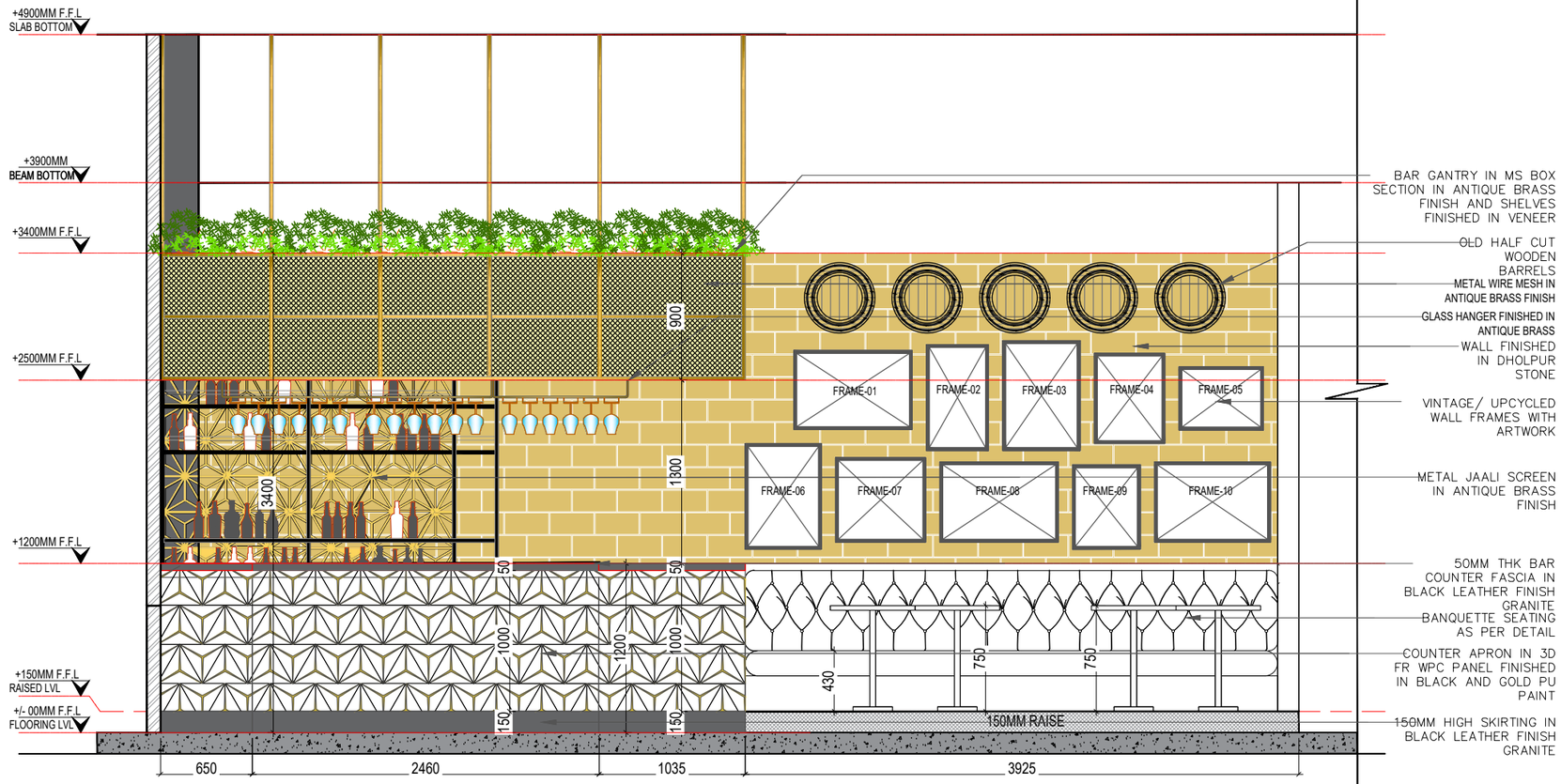

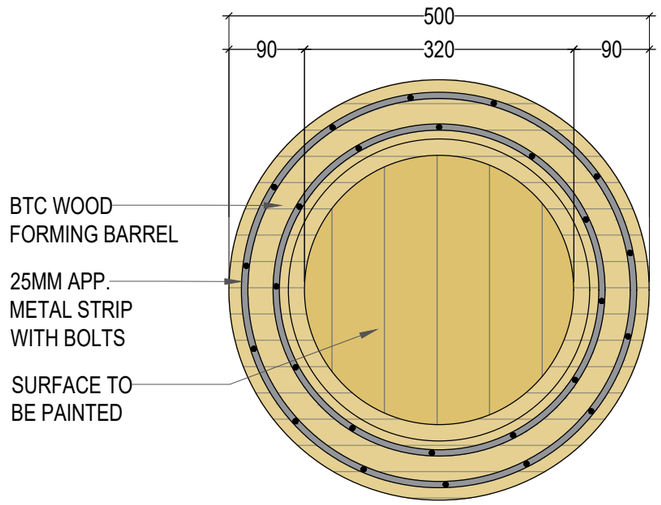

01 ELEVATION OF HALF CUT BARREL
#NTS

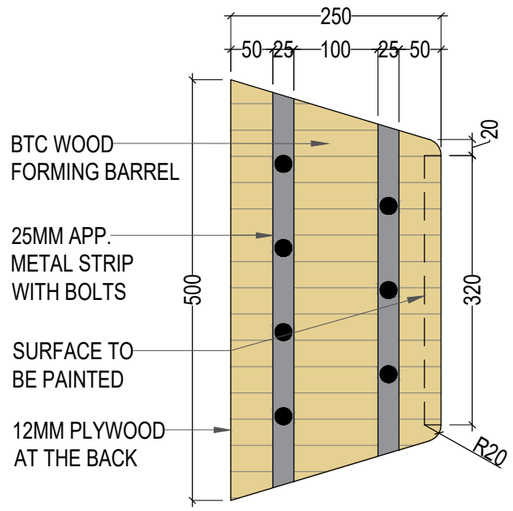

02 SIDE ELEVATION OF HALF CUT BARREL
#NTS

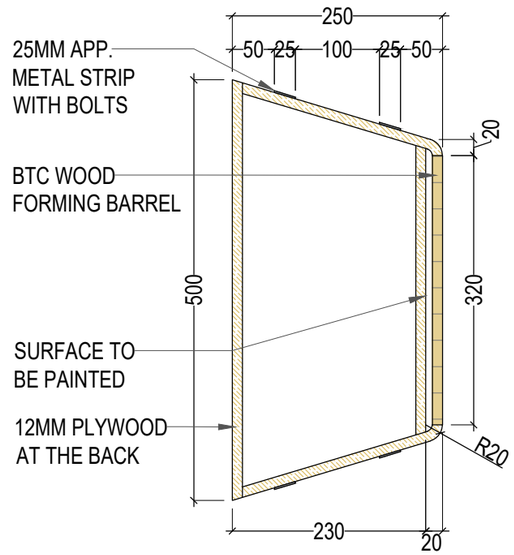

03 SECTION OF HALF CUT BARREL
#NTS

GENERAL NOTES:

1. ALL DIMENSIONS AND SET OUT COORDINATES ARE IN MILLIMETERS. ALL CHAINAGES AND FRLS ARE IN METERS.UNLESS STATED OTHERWISE.
2. ONLY WRITTEN DIMENSIONS SHALL BE FOLLOWED. THE DRAWING SHALL NOT BE SCALED.
3. THE LANDSIDE WORKS FOR ELEVATED ROAD, GRADE LEVEL ROADS AND DEPARTURE KERB IS ALIGNED w.r.t GRID H1 N11 AND H1 N39.
4. THE PIER POSITIONS AND SPAN ARRANGEMENTS SHOWN IN THE DRAWING ARE BASED ON REVISED LAYOUT. FOR ELABORATE DETAILS OF SPAN CONFIGURATION REFER STRUCTURAL DRAWINGS.
5. THE EXTENT OF APROACH RAMPS INCLUDING STRUCTURAL PORTION AND EARTHFILL PORTION (REWALL PORTION) SHOWN IN THE DRAWING IS TENTATIVE. THE EXACT DETAILS WILL BE BASED ON PLAN AND PROFILE DRAWINGS.
6. THE BATTERY LIMIT SHOWN IN THE DRAWING IS BASED ON TENDER DRAWING/ REVISED LAYOUT
7. LEVEL OF EXISTING GROUND, GRADED LEVEL AND ROAD FORMATION LEVEL ARE NOT SHOWN IN THE LAYOUT DRAWING THEY WILL BE PART OF PLAN AND PROFILE DRAWINGS.
8. THIS SCHEME DESIGN / DRAWING IS SUBMITTED FOR GENERAL ARRANGEMENT AND SETOUT ONLY.

TERMINAL 2

Bangalore International Airport

OWNER

Kempegowda International Airport Bangalore

Bangalore International Airport Limited

Project Office
Kempegowda International
Airport Bengaluru
Devanahalli, Bangalore 560 300 India

LEAD CONSULTANT

SOM

SOM India LLC
14 Wall Street, New York, NY 10005

MEP ENGINEER
ARUP LTD.
77 Water Street
New York, NY 10005

BAGGAGE CONSULTANT
BNP Associates
P.O. Box 32746
Abu Dhabi, UAE

LIGHTING CONSULTANT
BPI
302 5th Ave, 12th FL
New York, NY 10001

LANDSCAPE
Grant Associates
22 Mill Street
Bath, UK BA1 1UT

IT / SECURITY / PA / FAS
MBII
44 Mobile Drive
Toronto, ON M4A 2P2

SIGNAGE / WAYFINDING
MSD
2 Young Place
East Kilbride, GLA G75 0TD

CLIENT:

ARCHITECT:

MEP CONSULTANT:

KEYPLAN

SEAL & SIGNATURE

GFC-01 SUBMISSION

CHECKED BY	SIGN	DATE	CHECKED BY	SIGN	DATE
ARCHITECTURE		19/09/23	FPS		
CIVIL & STRUCTURAL			FIFING		
ELECTRICAL			PHE		
ELV SYSTEM			AIRPORT SYSTEM		
SIGNAGE			FAS		
HIGHWAYS					

QRCODE

DRAWING TITLE
HALF CUT BARREL DETAIL
KFC & UB

BIAL_KFC&UB_16
DRAWING NUMBER

SCALE: NTS

SHEET SIZE - A0